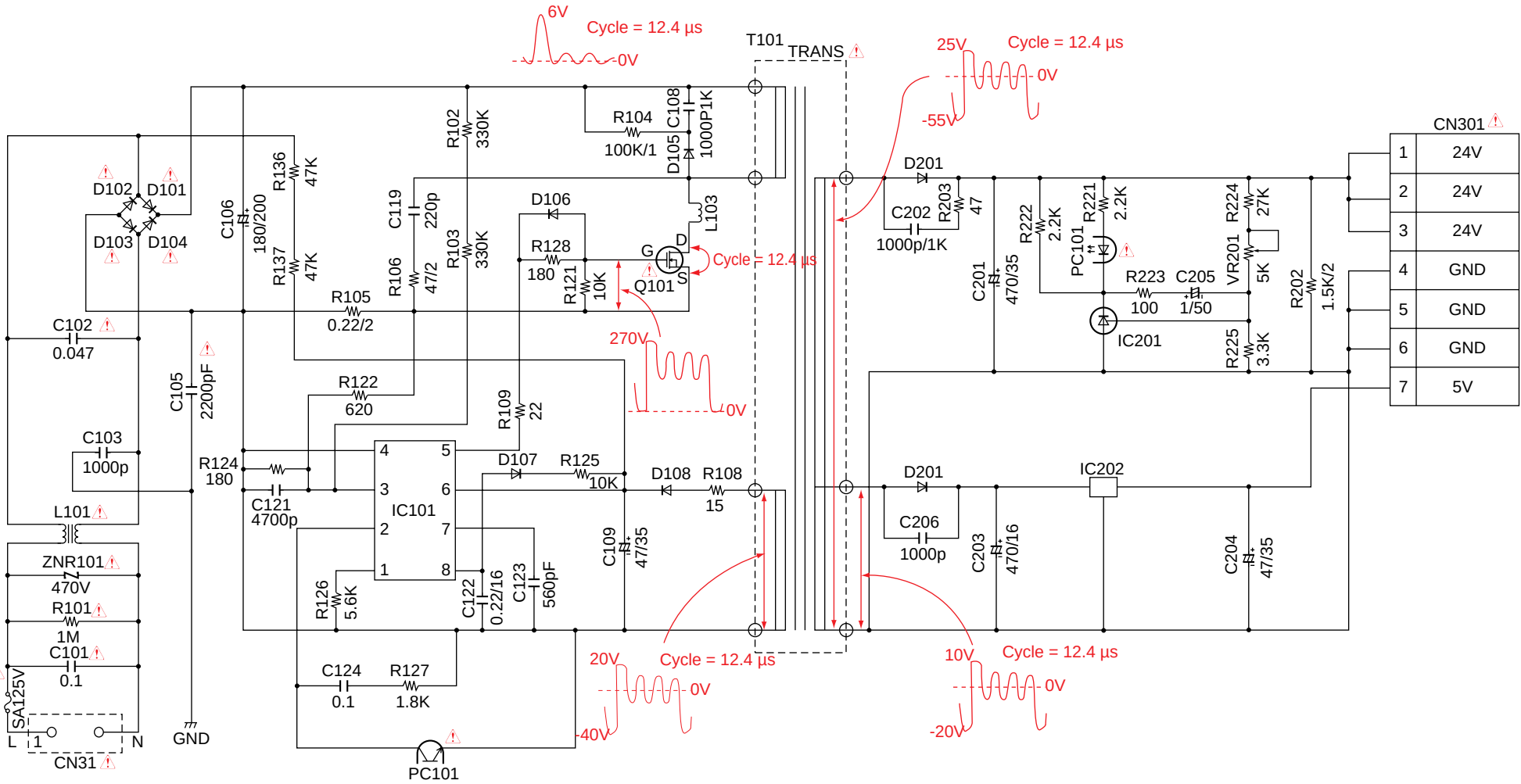
6V
Cycle = 12.4 µs
0V
T101
TRANS
25V
Cycle = 12.4 µs
0V
-55V
CN301
1 24V
2 24V
3 24V
4 GND
5 GND
6 GND
7 5V
D102
D101
D103
D104
C106
180/200
R136
47K
R137
47K
R102
330K
R104
100K/1
C108
1000P1K
D105
C119
220p
R103
330K
D106
R128
180
R121
10K
L103
G
D
S
Q101
Cycle = 12.4 µs
R106
47/2
R105
0.22/2
C102
0.047
270V
0V
C105
2200pF
R122
620
R109
22
C103
1000p
R124
180
C121
4700p
IC101
D107
R125
10K
D108
R108
15
L101
ZNR101
470V
R101
1M
C101
0.1
F101
SA125V
L
N
CN31
GND
R126
5.6K
C122
0.22/16
C123
560pF
C109
47/35
C124
0.1
R127
1.8K
PC101
20V
Cycle = 12.4 µs
0V
-40V
D201
C202
1000p/1K
R203
47
C201
470/35
R222
2.2K
R221
2.2K
PC101
R224
27K
VR201
5K
R223
100
C205
1/50
IC201
R225
3.3K
R202
1.5K/2
D201
C206
1000p
IC202
C203
470/16
C204
47/35
10V
Cycle = 12.4 µs
0V
-20V